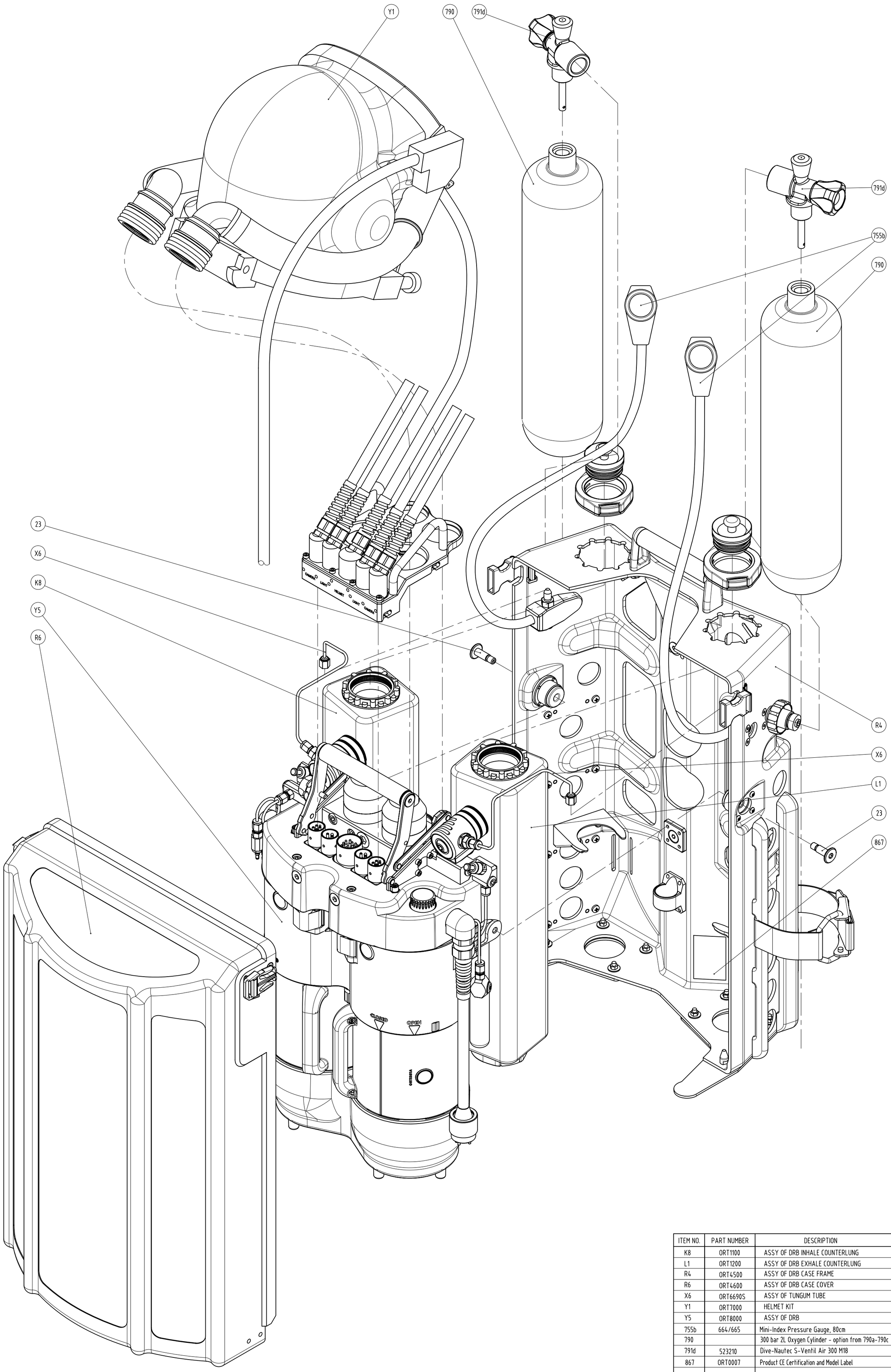

ITEM NO.	PART NUMBER	DESCRIPTION	Quantity
K8	ORT1100	ASSY OF DRB INHALE COUNTERLUNG	1
L1	ORT1200	ASSY OF DRB EXHALE COUNTERLUNG	1
R4	ORT4500	ASSY OF DRB CASE FRAME	1
R6	ORT4600	ASSY OF DRB CASE COVER	1
X6	ORT6690S	ASSY OF TUNGUM TUBE	2
Y1	ORT7000	HELMET KIT	1
Y5	ORT8000	ASSY OF DRB	1
755b	664/665	Mini-Index Pressure Gauge, 80cm	2
790		300 bar 2L Oxygen Cylinder - option from 790a-790c	2
791d	523210	Dive-Nautec S-Ventil Air 300 M18	2
867	ORT0007	Product CE Certification and Model Label	1

Units of measurement	mm UNLESS OTHERWISE STATED	Mass	Format ISO A1	Designed by S.Belousov	Changed by -	Approved by - date A.BOGATCHEV	Filename ORT0000A2.dwg	Date 30.11.2009	Scale 1:5
Material									
Quantity	SEE BOM		Projection	DEEP LIFE LTD		Title/Name Commercial Diver's Umbilical eCCR/eSCR			
Tolerances				Strictly Commercial-in-Confidence, copyright (c) 2008. Copying prohibited except as provided for under written contract with Process Insight ltd.					
Surface roughness						Drawing number ORT0000		Edition A2	Sheet(s) 1(1)
Surface treatment									